EED 206
(DIGITAL ELECTRONICS)

PROJECT REPORT

FIVE STATION INTERCOM

SUBMITTED BY:

AKANKSHA KAUL: 1710110032
DANIEL DAVID VAZ: 1710110097
KABIR KANHA ARORA: 1710110165

FACULTY:

Dr NAVEEN G. BABU

(Signature)

ACKNOWLEDGEMENTS

Since you're here, we'd like to take this opportunity to extend our heartfelt gratitude to the university and **Professor Naveen Babu** for a wonderful opportunity. We truly enjoyed the course and what it taught us.

We'd like to thank sir for his ceaseless support and guidance throughout the course of the semester.

We would also like to thank **Ashwani sir** for his help in the lab. This project would not have been possible without their able guidance and expertise.

CIRCUIT DIAGRAM

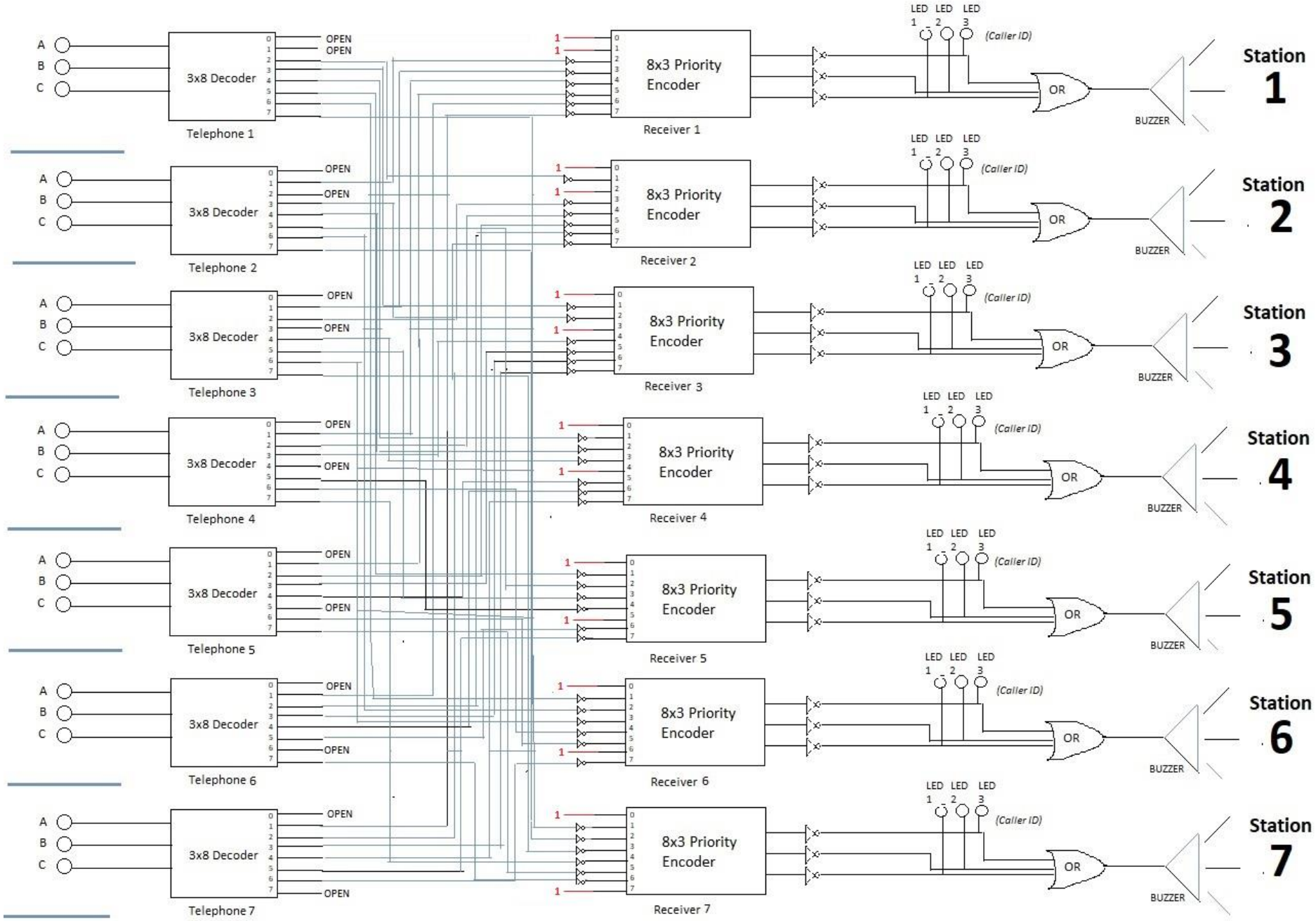

Integrated Circuits (ICs) Used

Enable			Input			Output							
LE'	E_1'	E_2	A_2	A_1	A_0	Y_0	Y_1	Y_2	Y_3	Y_4	Y_5	Y_6	Y_7
1	0	1	X	X	X	*Stable*							
X	1	X	X	X	X	0	0	0	0	0	0	0	0
X	X	0	X	X	X	0	0	0	0	0	0	0	0
0	0	1	0	0	0	1	0	0	0	0	0	0	0
			0	0	1	0	1	0	0	0	0	0	0
			0	1	0	0	0	1	0	0	0	0	0
			0	1	1	0	0	0	1	0	0	0	0
			1	0	0	0	0	0	0	1	0	0	0
			1	0	1	0	0	0	0	0	1	0	0
			1	1	0	0	0	0	0	0	0	1	0
			1	1	1	0	0	0	0	0	0	0	1

74HC237
(3x8 Decoder)

Input									Output				
EI	A_7	A_6	A_5	A_4	A_3	A_2	A_1	A_0	Y_0	Y_1	Y_2	G_S	E_O
1	X	X	X	X	X	X	X	X	1	1	1	1	1
0	1	1	1	1	1	1	1	1	1	1	1	1	0
0	0	X	X	X	X	X	X	X	0	0	0	0	1
0	1	0	X	X	X	X	X	X	0	0	1	0	1
0	1	1	0	X	X	X	X	X	0	1	0	0	1
0	1	1	1	0	X	X	X	X	0	1	1	0	1
0	1	1	1	1	0	X	X	X	1	0	0	0	1
0	1	1	1	1	1	0	X	X	1	0	1	0	1
0	1	1	1	1	1	1	0	X	1	1	0	0	1
0	1	1	1	1	1	1	1	0	1	1	1	0	1

IC 74HC148
(8x3 Priority Encoder)

A_1	A_0	Y
0	0	0
0	1	1
1	0	1
1	1	1

IC 74HC32
(Quad dual-input OR Gate)

A	Y
0	1
1	0

IC 74HC04
(6 dual-input NOT Gate)

Pin Connections of the ICs

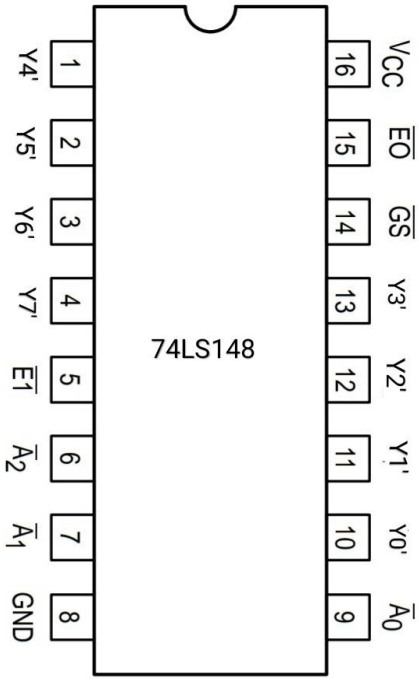

IC 74HC148
(8x3 Priority Encoder)

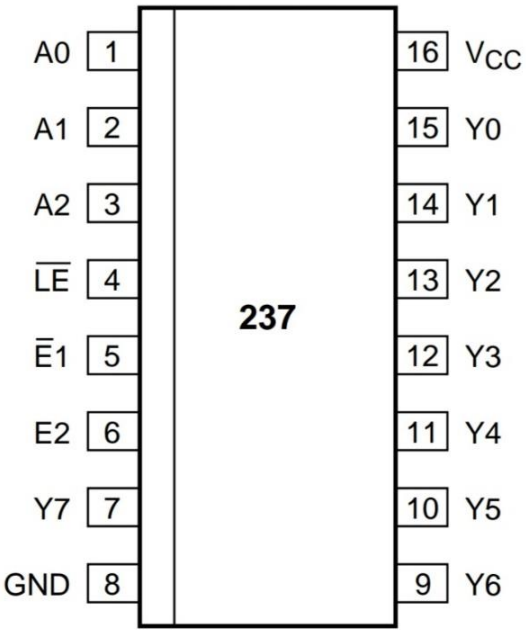

74HC237
(3x8 Decoder)

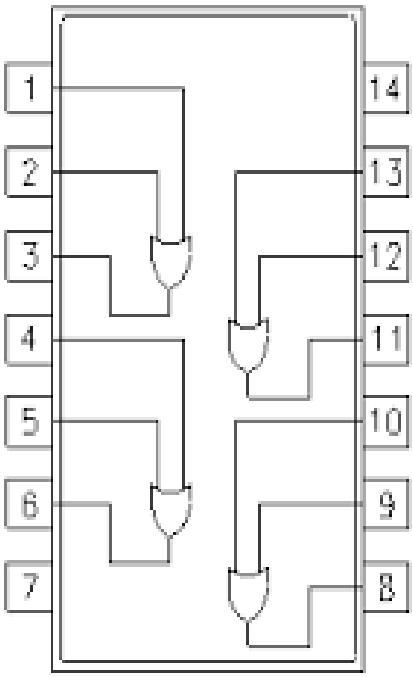

IC 74HC32
(Quad dual-input OR Gate)

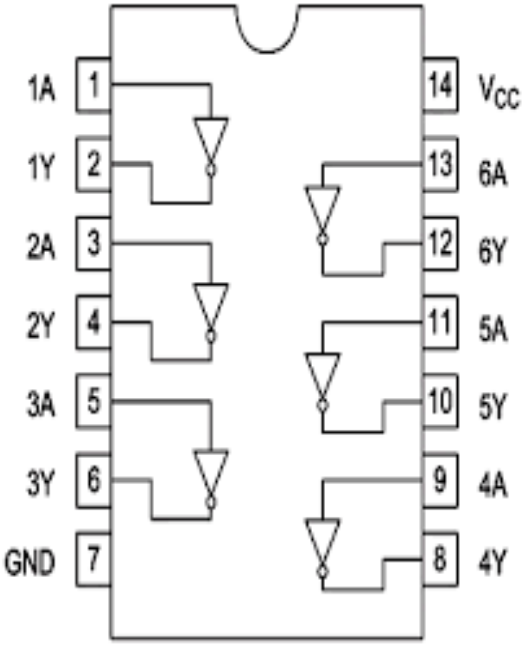

IC 74HC04
(6 dual-input NOT Gate)

Input-Output Combinations for each station

Decoder Input			Decoder Output	Encoder Input					Encoder Output	Or Input			Or Output
A2	A1	A0	$Y_7Y_6Y_5Y_4Y_3Y_2Y_1Y_0$	A4	A3	A2	A1	A0	$Y_2Y_1Y_0$	A2	A1	A0	Y
0	0	0	0 0 0 0 0 0 0 1	1	1	1	1	1	1 1 1	0	0	0	0
0	0	1	*Disconnected*										
0	1	0	0 0 0 0 0 1 0 0	1	1	1	0	1	1 0 1	0	1	0	1
0	1	1	0 0 0 0 1 0 0 0	1	1	0	1	1	1 0 0	0	1	1	1
1	0	0	0 0 0 1 0 0 0 0	1	0	1	1	1	0 1 1	1	0	0	1
1	0	1	0 0 1 0 0 0 0 0	0	1	1	1	1	0 1 0	1	0	1	1

Station 1

Decoder Input			Decoder Output	Encoder Input					Encoder Output	Or Input			Or Output
A2	A1	A0	$Y_7Y_6Y_5Y_4Y_3Y_2Y_1Y_0$	A4	A3	A2	A1	A0	$Y_2Y_1Y_0$	A2	A1	A0	Y
0	0	0	0 0 0 0 0 0 0 1	1	1	1	1	1	1 1 1	0	0	0	0
0	0	1	0 0 0 0 0 0 1 0	1	1	1	1	0	1 1 0	0	0	1	1
0	1	0	*Disconnected*										
0	1	1	0 0 0 0 1 0 0 0	1	1	0	1	1	1 0 0	0	1	1	1
1	0	0	0 0 0 1 0 0 0 0	1	0	1	1	1	0 1 1	1	0	0	1
1	0	1	0 0 1 0 0 0 0 0	0	1	1	1	1	0 1 0	1	0	1	1

Station 2

Decoder Input			Decoder Output	Encoder Input					Encoder Output	Or Input			Or Output
A2	A1	A0	$Y_7Y_6Y_5Y_4Y_3Y_2Y_1Y_0$	A4	A3	A2	A1	A0	$Y_2Y_1Y_0$	A2	A1	A0	Y
0	0	0	0 0 0 0 0 0 0 1	1	1	1	1	1	1 1 1	0	0	0	0
0	0	1	0 0 0 0 0 0 1 0	1	1	1	1	0	1 1 0	0	0	1	1
0	1	0	0 0 0 0 0 1 0 0	1	1	1	0	1	1 0 1	0	1	0	1
0	1	1	*Disconnected*										
1	0	0	0 0 0 1 0 0 0 0	1	0	1	1	1	0 1 1	1	0	0	1
1	0	1	0 0 1 0 0 0 0 0	0	1	1	1	1	0 1 0	1	0	1	1

Station 3

Decoder Input			Decoder Output	Encoder Input					Encoder Output	Or Input			Or Output
A2	**A1**	**A0**	**$Y_7Y_6Y_5Y_4Y_3Y_2Y_1Y_0$**	**A4**	**A3**	**A2**	**A1**	**A0**	**$Y_2Y_1Y_0$**	**A2**	**A1**	**A0**	**Y**
0	0	0	0 0 0 0 0 0 0 1	1	1	1	1	1	1 1 1	0	0	0	0
0	0	1	0 0 0 0 0 0 1 0	1	1	1	1	0	1 1 0	0	0	1	1
0	1	0	0 0 0 0 0 1 0 0	1	1	1	0	1	1 0 1	0	1	0	1
0	1	1	0 0 0 0 1 0 0 0	1	1	0	1	1	1 0 0	0	1	1	1
1	0	0	*Disconnected*										
1	0	1	0 0 1 0 0 0 0 0	0	1	1	1	1	0 1 0	1	0	1	1

Station 4

Decoder Input			Decoder Output	Encoder Input					Encoder Output	Or Input			Or Output
A2	**A1**	**A0**	**$Y_7Y_6Y_5Y_4Y_3Y_2Y_1Y_0$**	**A4**	**A3**	**A2**	**A1**	**A0**	**$Y_2Y_1Y_0$**	**A2**	**A1**	**A0**	**Y**
0	0	0	0 0 0 0 0 0 0 1	1	1	1	1	1	1 1 1	0	0	0	0
0	0	1	0 0 0 0 0 0 1 0	1	1	1	1	0	1 1 0	0	0	1	1
0	1	0	0 0 0 0 0 1 0 0	1	1	1	0	1	1 0 1	0	1	0	1
0	1	1	0 0 0 0 1 0 0 0	1	1	0	1	1	1 0 0	0	1	1	1
1	0	0	0 0 0 1 0 0 0 0	1	0	1	1	1	0 1 1	1	0	0	1
1	0	1	*Disconnected*										

Station 5

Project Cost

S. No.	Component	Quantity	Unit Price	Cost
1	74LS148	5	₹39/-	₹195/-
2	74HC237	5	₹46/-	₹230/-
3	74HC032	5		
4	74HC04	10		
5	Buzzer	5	₹15/-	₹75/-
6	LED	15		
7	Breadboard (mini)	10		
8	Toggle Switches	15		
TOTAL				

Input Switches

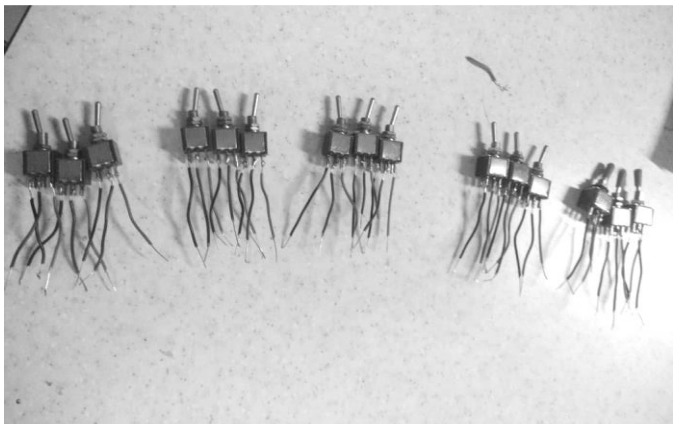

Our switches

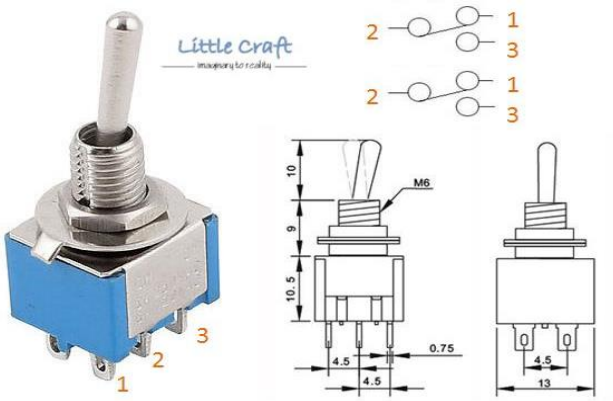

Pin Diagram for 6-Pin DPDT Dwitch

We used 15 6-Pin Double Pole-Double Throw (DPDT) Switches to give the input (calling) signals, using 3 switches per terminal.

SPDTs have three terminals: one common pin and two pins which vie for connection to the common.
*Adding another pole to the SPDT creates a double-pole, double-throw (**DPDT**) switch. Basically two SPDT switches, which can control two separate circuits, but are always switched together by a single actuator.*

Working Circuit

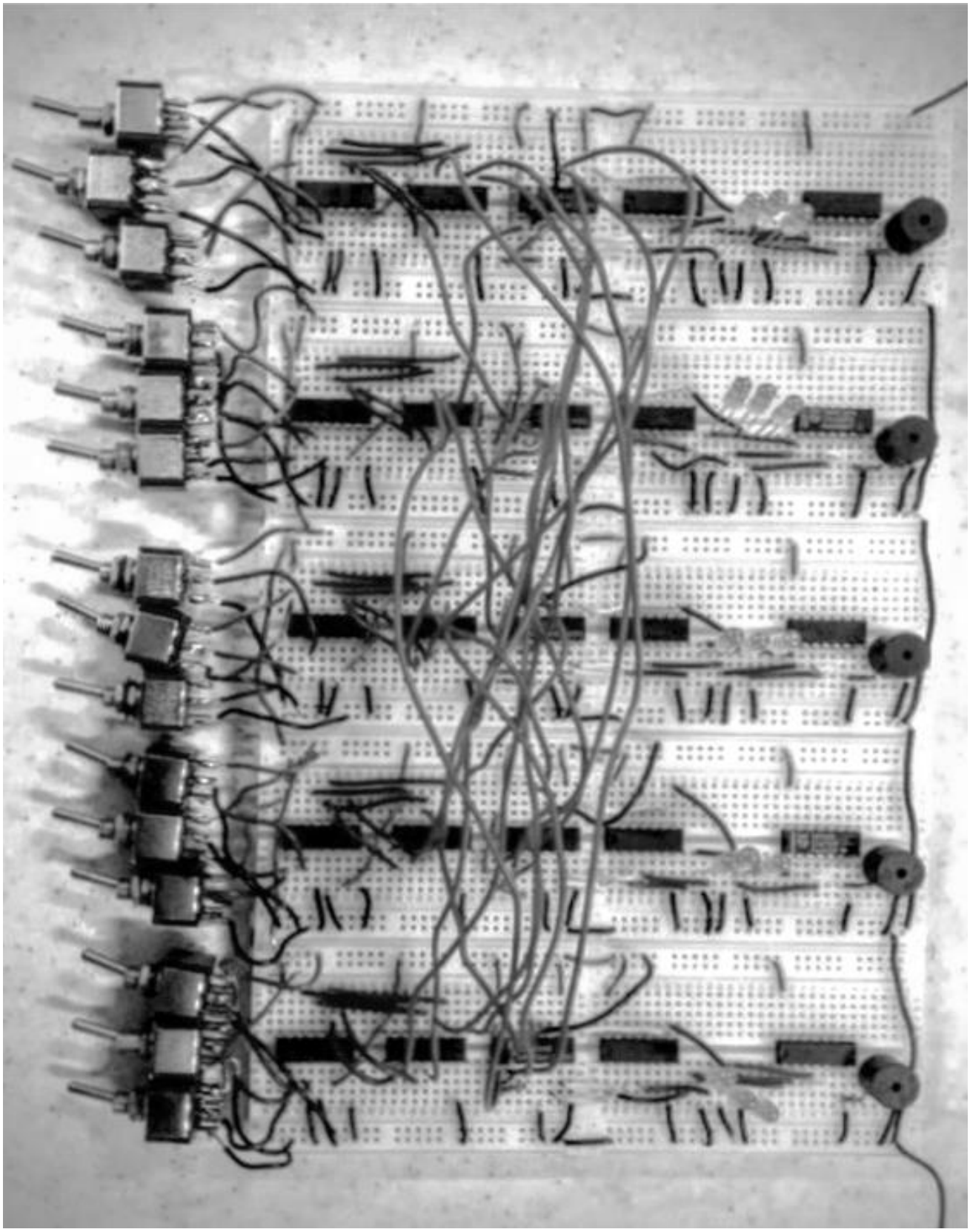

(Note: Due to an unexpected shortage of breadboards in the lab, we reduced our circuit to 5 stations instead of 7)

Design Challenges

One of the major challenges we faced initially was to come up with an original idea.
After a lot of brainstorming sessions, we came up with an idea to make an intercom. We can proudly state that the circuit design and implementation is 100% original and has in now was been copied from another source.
However, the sailing was not entirely smooth and we did have some hitches along the way. We did not take into account the fact that our Priority Encoder IC was based on Active Low logic and because of that, we had to remake the entire circuit after complementing all the inputs and outputs to and from the priority encoder, using NOT gates.
Soldering was a tough job and there were other things which we did for the first time and learnt along the way. The challenge was what made this project especially fun.

Conclusions

This being our first ever experience in designing and implementing an application of electronics on our own, was a fantastic learning curve. We spent long hours creating a prototype which we're quite proud of, and we also understand that there can be quite a few additions and upgradations that can be made to it, for it to become a better product in itself. The hands-on experience helped us witness first-hand how the electronic components work and interact.

Overall, we thoroughly enjoyed the experience and feel a deep sense of satisfaction and pride in submitting our project and report.

Thank you.